CX Series Area Sensors

Area Sensors - CX0 Series

- Total crossbeam through all the optics
- 160 and 320mm detection heights
- Pitch 5mm and 10mm
- Operating distance up to 3m (for 5mm pitch) and 6m (for 10mm pitch)
- Digital PNP output
- N.O./N.C. configurable
- Adjustment by teach-in with 2 levels of adjustment
- Three year warranty

CX0 Series Selection Table

Part Number	Price	Detection Height mm[in]	Operating Distance		Smallest Detectable Object		Max Response Time	Output	Approximate Product Weight per Unit - kg [lb]
			Min	Max	(Fine Teach)	(Gross Teach)			
5mm Pitch									
CX0E1RP-05-016V	$293.00	160 [6.3]	0.3 m	3m	1.5 mm	2.5 mm	11ms	PNP; N.O./N.C. configurable	0.5 [1.1]
10mm Pitch									
CX0E1RP-10-016V	$216.00	160 [6.3]	0.5 m	6m	2.5 mm	4mm	5.3 ms	PNP; N.O./N.C. configurable	0.5 [1.1]
CX0E1RP-10-032V	$367.00	320 [12.6]	1m	6m	2.5 mm	4mm	6.6 ms	PNP; N.O./N.C. configurable	1 [2.2]

CX Series Area Sensors

Area Sensors - CX0 Series

Dimensions
mm [in]

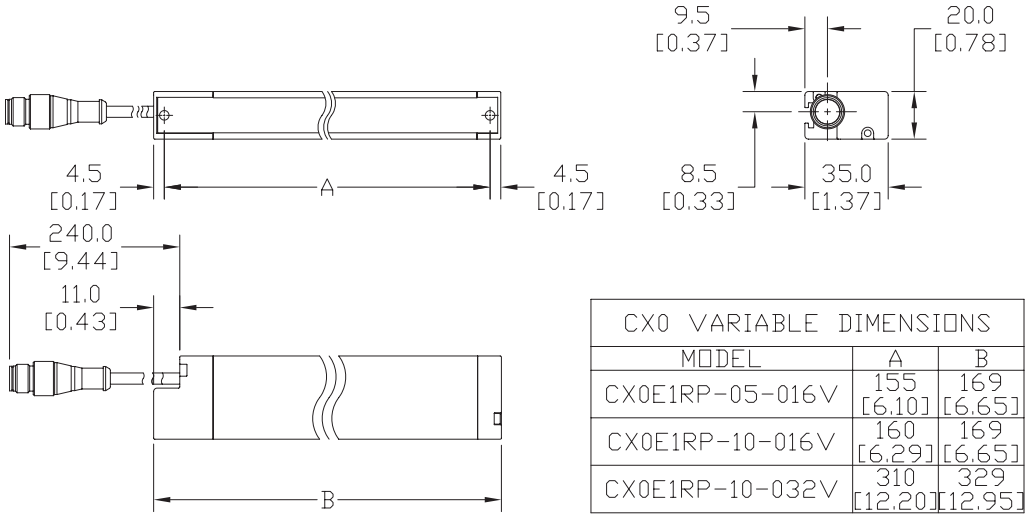

CX0 VARIABLE DIMENSIONS		
MODEL	A	B
CX0E1RP-05-016V	155 [6.10]	169 [6.65]
CX0E1RP-10-016V	160 [6.29]	169 [6.65]
CX0E1RP-10-032V	310 [12.20]	329 [12.95]

See our website: www.AutomationDirect.com for complete Engineering drawings.

CX Series Area Sensors

Area Sensors - CX0 Series

Connections

CX0 Series Emitter with Teach-In

M12, 4-Pole Male Connector	Wiring	Connector

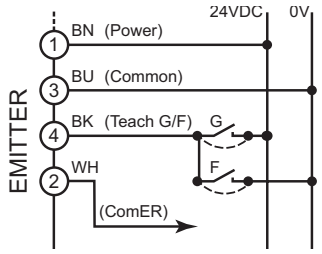

Pin	Color	Signal	Description
1	BN	24VDC	Power supply input from 16.8 to 30V
2	WH	ComER	Connect to same signal of the receiver, maximum cable length: 20m
3	BU	0V	Supply voltage reference, this pin must be tied together to the common of the receiver, maximum cable length: 20m
4	BK	Teach G/F	Teach-in input: GROSS at 24VDC; FINE at 0V

NOTE: Pin 2 (ComER) must be connected to Pin 5 (ComER) of the receiver.

CX0 Series Receiver with Output PNP and Teach-In Function

M12, 5-Pole Male Connector	Wiring	Connector

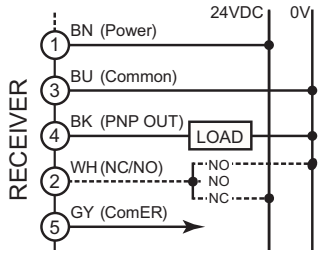

Pin	Color	Signal	Description
1	BN	24VDC	Power supply input from 16.8 to 30V
2	WH	N.C./N.O.	Open or 0VDC: Set output normally open, Dark operate +24VDC: Set output normally closed, Light operate
3	BL	0VDC	Supply voltage reference. This pin must be tied together to the common of the emitter, maximum cable length: 20m
4	BK	PNP Out	Apply a load connected to the common, maximum current 100mA.
5	GY or GN/YL	ComER	Connect to the same signal of the emitter, maximum cable length: 20m

NOTE: Pin 5 (ComER) must be connected to Pin 2 (ComER) of the sender.

CX Series Area Sensors

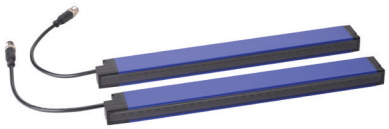

Area Sensors - CX2 Series

- Parallel beams and floating crossbeams with variable amplitude
- Synchronization by cable
- Pitch 5mm and 10mm
- Detection height up to 480mm (pitch 5mm) and up 960mm (pitch 10mm)
- Maximum operating distance up to 3m (for 5mm pitch) and 6m (for 10mm pitch)
- Digital outputs PNP ; analog current output (4 to 20mA) or analog voltage output (0 to 10V)
- Blanking function
- Three year warranty

CX2 Series Selection Table

Part Number	Price	Detection Height mm[in]	Operating Distance Min	Operating Distance Max	Smallest Detectable Object (Fine Teach)	Smallest Detectable Object (Gross Teach)	Max Response Time	Output	Approximate Product Weight per Unit - kg [lb]
5mm Pitch									
CX2E0RF-05-016V	$293.00	160 [6.3]	0.1 m	3m	1.5 mm	2.5 mm	14.8 ms	PNP; N.O./N.C. configurable; 0-10 VDC analog out	1.1 [2.43]
CX2E0RF-05-032V	$529.00	320 [12.6]			4mm	5mm	27.6 ms		2.2 [4.85]
CX2E0RF-05-048V	$751.00	480 [18.90]					40.4 ms		3.5 [7.72]
CX2E0RD-05-016V	$293.00	160 [6.3]			1.5 mm	2.5 mm	14.8 ms	PNP; N.O./N.C. configurable; 4-20 mA analog out	1.1 [2.43]
CX2E0RD-05-032V	$529.00	320 [12.6]			4mm	5mm	27.6 ms		2.2 [4.85]
CX2E0RD-05-048V	$751.00	480 [18.90]					40.4 ms		3.5 [7.72]
10mm Pitch									
CX2E0RF-10-016V	$275.00	160 [6.3]	0.3 m	6m	2.5 mm	4mm	8.4 ms	PNP; N.O./N.C. configurable; 0-10 VDC analog out	1.1 [2.43]
CX2E0RF-10-032V	$389.00	320 [12.6]					14.8 ms		2.2 [4.85]
CX2E0RF-10-048V	$529.00	480 [18.90]			8mm	10mm	21.2 ms		3.5 [7.72]
CX2E0RF-10-064V	$622.00	640 [25.20]					27.6 ms		4.5 [9.90]
CX2E0RF-10-080V	$756.00	800 [31.50]					34ms		5.7 [12.57]
CX2E0RF-10-096V	$854.00	960 [37.79]					40.4 ms		6.6 [14.55]
CX2E0RD-10-016V	$275.00	160 [6.3]			2.5 mm	4mm	8.4 ms	PNP; N.O./N.C. configurable; 4-20 mA analog out	1.1 [2.43]
CX2E0RD-10-032V	$389.00	320 [12.6]					14.8 ms		2.2 [4.85]
CX2E0RD-10-048V	$529.00	480 [18.90]			8mm	10mm	21.2 ms		3.5 [7.72]
CX2E0RD-10-064V	$622.00	640 [25.20]					27.6 ms		4.5 [9.90]
CX2E0RD-10-080V	$756.00	800 [31.50]					34ms		5.7 [12.57]
CX2E0RD-10-096V	$854.00	960 [37.79]					40.4 ms		6.6 [14.55]

CX Series Area Sensors

Area Sensors - CX2 Series

Dimensions mm [in]

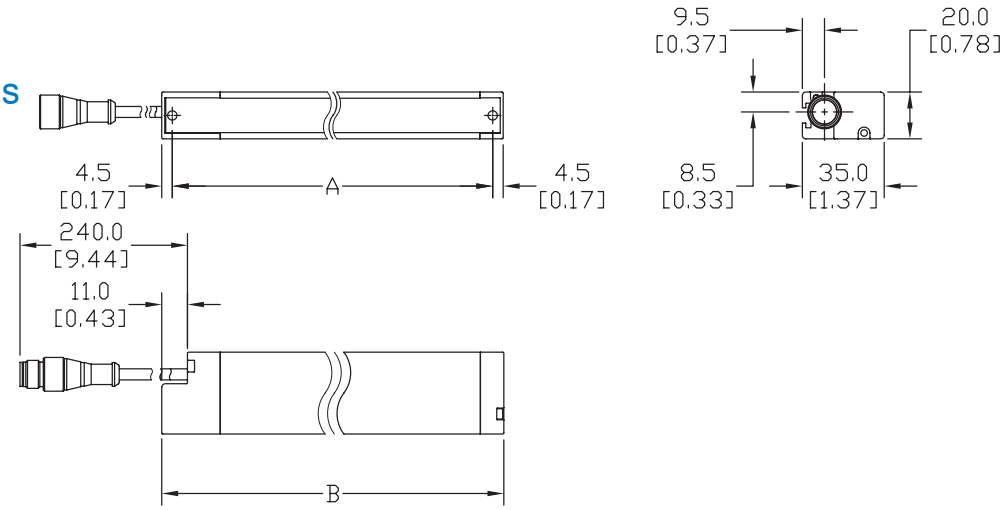

CX2 VARIABLE DIMENSIONS		
MODEL	A	B
CX2E0RF-05-016V	160 [6.29]	169 [6.65]
CX2E0RF-05-032V	320 [12.59]	329 [12.95]
CX2E0RF-05-048V	480 [18.89]	489 [19.25]
CX2E0RF-10-016V	160 [6.29]	169 [6.65]
CX2E0RF-10-032V	320 [12.59]	329 [12.95]
CX2E0RF-10-048V	480 [18.89]	489 [19.25]
CX2E0RF-10-064V	640 [25.19]	649 [25.55]
CX2E0RF-10-080V	800 [31.49]	809 [31.85]
CX2E0RF-10-096V	960 [37.79]	969 [38.14]

MODEL	A	B
CX2E0RD-05-016V	160 [6.29]	169 [6.65]
CX2E0RD-05-032V	320 [12.59]	329 [12.95]
CX2E0RD-05-048V	480 [18.89]	489 [19.25]
CX2E0RD-10-016V	160 [6.29]	169 [6.65]
CX2E0RD-10-032V	320 [12.59]	329 [12.95]
CX2E0RD-10-048V	480 [18.89]	489 [19.25]
CX2E0RD-10-064V	640 [25.19]	649 [25.55]
CX2E0RD-10-080V	800 [31.49]	809 [31.85]
CX2E0RD-10-096V	960 [37.79]	969 [38.14]

See our website: www.AutomationDirect.com for complete Engineering drawings.

CX Series Area Sensors

Area Sensors - CX2 Series

Connections

CX2 Series Emitter with Input Test

M12, 4-Pole Male Connector

Wiring

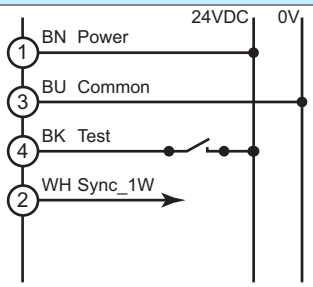

Connector

Pin	*Color*	*Signal*	*Description*
1	BN	24VDC	Power supply input from 16.8 to 30V
2	WH	Sync_1W	Connect to same signal of the receiver, maximum cable length: 20m
3	BU	0V	Supply voltage reference, this pin must be tied together to the common of the receiver, maximum cable length: 20m
4	BK	Test	Test input: if it is connected to the positive it interrupts the emission

NOTE: Pin 2 (Sync_1W) must be connected to Pin 8 (Sync_1W on the reciever), otherwise the yellow LED of the emitter and receiver are flashing highlighting an error.

CX2 Series Receiver with Output PNP and Teach-In Function

M12, 8-Pole Male Connector

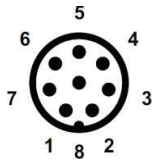

Wiring

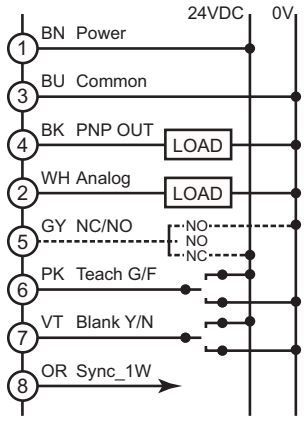

Connector

Pin	*Color*	*Signal*	*Description*
1	BN	24VDC	Power supply input from 16.8 to 30V
2	WH	Analog	Analog Voltage Output 0-10V, or 4-20mA, depending on model
3	BU	0V	Supply voltage reference. This pin must be tied together the common of the emitter, maximum cable length: 20m
4	BK	PNP Out	Apply a load connected to the common, maximum current 100mA
5	GY	N.C./N.O.	Open or 0VDC: Outputs proportional to optics in Dark +24VDC: Outputs proportional to optics in Light
6	PK	Teach G/F	Teach-in input: GROSS at 24VDC; FINE at 0V
7	VT	Blank Y/N	BLANKING at Power-ON Activation (at positive) - Deactivation (at common)
8	OR	Sync_1W	Connect to the same signal of the emitter, maximum cable length: 20m

NOTE: Pin 8 (Sync_1W) must be connected to Pin 2 (Sync_1W on the emitter), otherwise the yellow LED of the receiver and emitter are flashing highlighting an error.

CX Series Area Sensors Specifications

CX Series Area Sensors Specifications		
Model	***CX0***	***CX2***
Type	Through-Beam	
Sensing Distance	0.3 - 3m (5mm pitch) 0.5 - 6m (10mm pitch 160mm detection height) 1 - 6m (10mm pitch 320mm detection height)	0.1 - 3m (5mm pitch) 0.3 - 6m (10mm pitch)
Light Spot Diameter	NA	
Detection Height pitch 5mm	160mm	160mm; 320mm; 480mm
Number of beams pitch 5mm	32	33 (160mm); 65 (320mm); 97 (480mm)
Detection Height pitch 10mm	160mm; 320mm	160mm; 320mm; 480mm; 640mm; 800mm; 960mm
Number of beams pitch 10mm	17 (160mm); 32 (320mm)	17 (160mm); 33 (320mm); 49 (480mm); 65 (640mm); 81 (800mm); 97 (960mm)
Emission	IR 850nm (pitch 5mm); 880nm (pitch 10mm)	
Sensitivity	Teach	
Time teach-in process (s)	15s max	= 0.5*N° beams
Time blanking (s)	NA	=1* N° beams
Output Type	PNP	PNP + 0 – 10V analog V or PNP + 4 – 20mA analog A
Operating Voltage	16.8 – 30 VDC	
No-load Supply Current	Emitter 120mA (@ 24V) max Receiver 90mA (@ 24V) max	Emitter 200mA (@ 24V) max Receiver 200mA (@ 24V) max
Operating (Load) Current	100mA	
Off-state (Leakage) Current	10µA	10µA
Voltage Drop	≤ 1.5V	
Switching Frequency	280Hz max (17 beams) 83Hz max (32 beams)	59.5 Hz (17 beams) 33.7 Hz (33 beams) 23.5 Hz (49 beams) 18.1 Hz (65 beams) 14.7 Hz (81 beams) 12.3 Hz (97 beams)
Ripple	≤10%	
Time Delay Before Availability (tv)	200ms	
Short-Circuit Protection	Yes	
Operating Temperature	-10 to 55 °C [14 to 131 °F]	
Protection Degree (DIN 40050)	IP67	
Emitter's LED Indicators - Switching Status	Refer to manual	
Receiver's LED Indicators - Switching Status	Refer to manual	
Housing Material	Painted aluminum	
Lens Material	PC	
Shock/Vibration	Acc. to IEC 60947-5-2	
Tightening Torque	NA	
Weight	480g max	2600g max

To obtain the most current agency approval information, see the Agency Approval Checklist on the specific part number's web page at www.AutomationDirect.com.

CX Series Area Sensor Accessories

CX Series Area Sensors Mounting Brackets		
Part Number	***Price***	***Description***
ST151	$7.75	Mounting bracket, replacement, right-angle, zinc plated steel. Package of 2. For use with CX area sensors.
ST4VS	$19.50	Mounting bracket, right-angle, zinc plated steel, anti-vibration mount. Package of 4. For use with 160mm height CX area sensors.
ST8VS	$25.50	Mounting bracket, right-angle, zinc plated steel, anti-vibration mount. Package of 8. For use with 320-960mm height CX area sensors.

ST151

ST4VS

ST8VS